IO SOCKETS

SERIES 898 • UNIVERSAL SERIAL BUS 3.1 TYPE C • TOP MOUNT RECEPTACLE

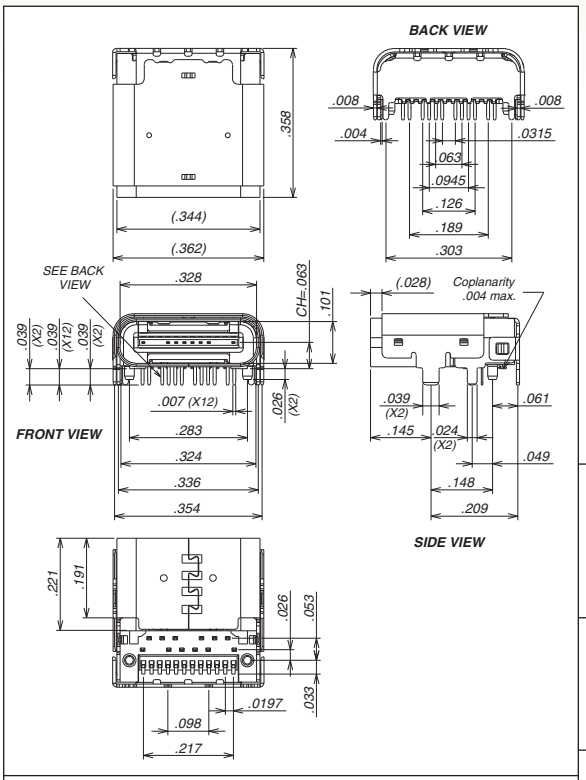

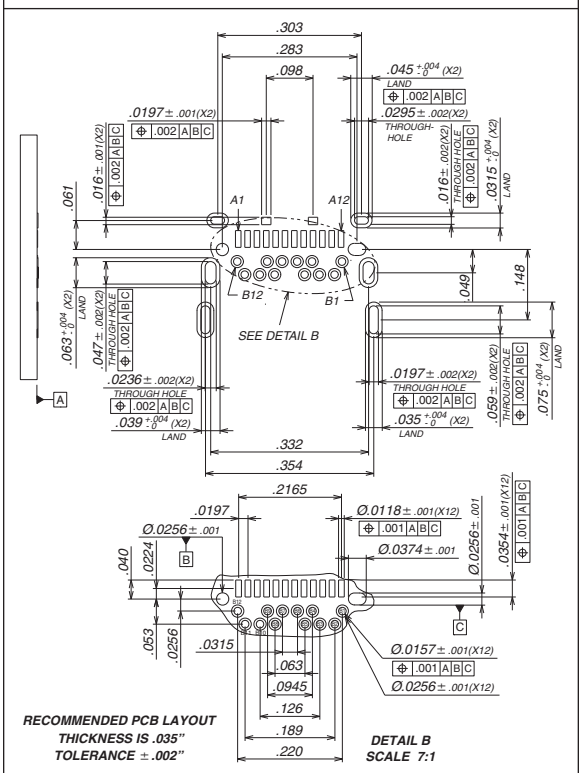

FIG. 1

- USB 3.1 Top Mount, Hybrid Layout
- Full metal housing with enhanced EMI/RFI prevention
- Reversible USB Type C Connector
- 10Gbps Data rate
- 2X faster than USB 3.0 with more efficient data transfer, higher through-put & improved I/O power efficiency
- For Storage, Smartphone, Tablet, Notebook, Docking, Automotive & Home Entertainment

ORDERING INFORMATION

FIG. 1	**Top Mount Type C Receptacle, Hybrid Layout**
	898-73-024-90-310001
	(Tape & Reel Packaged, 550 parts per 13" reel)

Technical Specifications

RoHS-2 2011/65/EU

Materials:

Terminals: Copper Alloy, Tin-Plated
Contacts: Copper Alloy, 30 µ" Gold-Plated
Casing and Shield: Stainless Steel
Insulator material: High temperature thermoplastic rated UL94V-0

General Specifications:

Temperature Range:
Operating: -55°C to +85°C
Nominal: +20°C

Electrical:

Voltage: 50VAC (rms)
LLCR: 40mΩ (initial), Δ10mΩ (after)
Dielectric Strength: 100VAC
Insulation resistance: 100MΩ min.
Current Rating: VBUS and GND contacts rated @ 1.25A each, paralleled for a total of 5A

Mechanical:

Durability: 10,000 cycles
Insertion force: 20 Newtons max.
Extraction force: 8 Newtons min., 20 Newtons max.

MILL-MAX Mill-Max Mfg. Corp. • 190 Pine Hollow Road, P.O. Box 300, Oyster Bay, NY 11771 • 516-922-6000 • Fax: 516-922-9253 • www.mill-max.com