# PRODUCT NUMBER: 0298-4-15-15-06-27-10-0

www.mill-max.com
DATA SHEET

## 0298-X-15-XX-06-XX-10-0

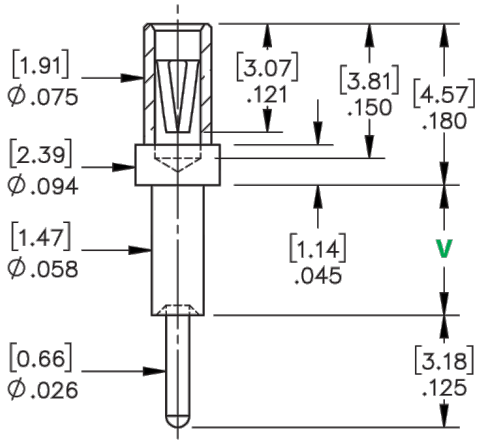


| Basic Part Number | Board Thickness | Length (V) |
|---|---|---|
| 0298-1 | .031″ [0.79] | .051″ [1.30] |
| 0298-2 | .062″ [1.57] | .082″ [2.08] |
| 0298-3 | .094″ [2.39] | .113″ [2.87] |
| 0298-4 | .125″ [3.18] | .145″ [3.68] |

Units: inch [mm]
Standard Tolerances:
Lengths: ± .005 [0.127]
Diameters: ± .002 [0.051]
Angles: ± 2°

| General Information | | |
|---|---|---|
| 1 | Product Lifecycle: | Active |
| | Product Family: | Pin Receptacle |
| 2 | Description: | Swage Mount Receptacle |
| 3 | Shell Material: | Brass Alloy |
| 4 | Operating Temperature Range: | -55/+125° C |
| 5 | Contact Number: | 06 - Standard 4 Finger Contact |
| | Contact Material: | Beryllium Copper |
| | Max Operating Temperature (Contact): | 120.00˚ C |
| | Country of Origin: | USA |
| 6 | ROHS: | Yes |

| Termination Style | |
|---|---|
| Tail: | Single |
| Tail Type: | SolderTail |
| Wire Termination: | N/A |

# 0298-4-15-15-06-27-10-0 - SPECIFICATIONS

| Product Attributes | |
|---|---|
| 7 Shell Plating: | 15 Shell Plating - 10 µ" Gold over Nickel |
| 8 Contact Plate: | 27 Contact Plating - 30 µ" Gold over Nickel |
| Hole Type: | Closed-Bottom |

| Key Dimensions | |
|---|---|
| Accepting Lead Range: | .022"-.032" (0,559-0,813mm) |
| Body Diameter: | .058" (1,473mm) |
| Body Length: | .082" (2,083mm) |
| Flange Diameter: | .094" (2,388mm) |
| Flange Length: | .045" (1,143mm) |
| Hole Depth: | .150" (3,810mm) |
| Overall Length: | .387" (9,830mm) |
| Tail Diameter: | .026" (0,660mm) |
| Tail Length: | .125" (3,175mm) |

| Electrical Specifications | |
|---|---|
| 9 Maximum Current: | 16A @ 30$^{0}$ C Temp. Rise |
| Maximum Derated Current: | 12.80A |
| Contact Resistance: | 10.00mΩ Max |

| Mechanical Specifications | |
|---|---|
| 10 Mechanical life (Durability): | 1,000 Cycles Minimum |
| 11 Shock: | No Elect. Discontinuity > 1µs @ 50g |
| 12 Vibration: | No Elect. Discontinuity > 1µs @ 10-2000HZ, 20 G |

| Mounting Specifications | |
|---|---|
| Mounting Feature: | Swage Mount |
| Press-Fit Feature: | N/A |
| Mounting Hole Type: | Plated Through Hole (PTH) |
| Mounting Hole: | .060" (1,524mm) |
| 13 Alternate Mounting: | Through-Hole Soldertail Mount |
| Alternate Mounting Hole: | .030" (0,762mm) |
| SMT Pad Size: | N/A |

| Packaging Information | |
|---|---|
| Packaging: | 15 - Packaged in Bulk |
| Reel Size: | N/A |

| Environmental & Export Classifications | |
|---|---|
| REACH Status: | REACH Unaffected |
| ECCN: | Contact Factory |
| HTSUS: | 8536.90.4000 |
| Cage Code: | 3N087 |
| Moisture Sensitivity Level (MSL): | 1 (Unlimited) |
| Special Handling Code: | UNDF |
| Prop 65: | N |
| Static Sensitive: | N |

## NOTES:

1. Part is Active and in Production, No Scheduled Obsolescence
2. Standard Tolerances:
   Lengths +/-.005" (0,13)
   Diameters: +/-.002" (0,051)
   Angles: +/- 2°
3. Brass Alloy 360 per ASTM B 16, or 385 per ASTM B455
4. Per IEC 60512-11-(4,-9,-10,-12)
5. Click the Link for Insertion/Extraction Force & Current/Temperature Derating Graphs
6. Mill-Max products labeled with the RoHS symbol are compliant with all three ROHS Directives. All of our products previously described as RoHS (2002/95/EC) and RoHS-2 (2011/65/EC) are also compliant with RoHS-3 (2015/863/EU).
7. GOLD per ASTM B 488, Type 1 (99.7% min. gold), Code C (130-200 HK {Knoop hardness}); NICKEL per ASTM B 689, Type 2 (Bright),
8. GOLD per ASTM B 488, Type 1 (99.7% min. gold), Code C (130-200 HK {Knoop hardness}), NICKEL per ASTM B 689, Type 2 (Bright)
9. Per IEC 60512-5-1, Current Carrying Capacity (evaluated at 30˚ C Temp. Rise)
10. Receptacles are capable of 1,000 Minimum insertion/extraction cycles for a broad range of applications. Mating pin size, shape and finish, along with application specific variables, will affect the life of a receptacle contact.
11. Per IEC 60512-6-3: Test 6c: Shock
12. Per IEC 60512-6-4: Test 6d: Vibration (sinusoidal)
13. For through-hole solder mounting of this part, the suggestion is to make the finished hole size, at its minimum, .004" larger than the diameter being soldered into the mounting hole.

## CONTACT:

# #06 CONTACT

**FOR .022"-.032" DIAMETER PINS (δ = .007)**
**4-FINGER (BeCu), GROUP D**

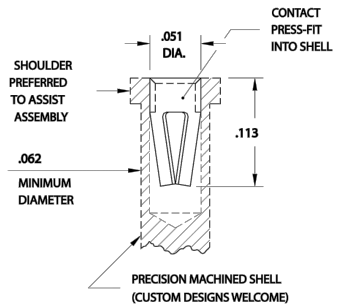


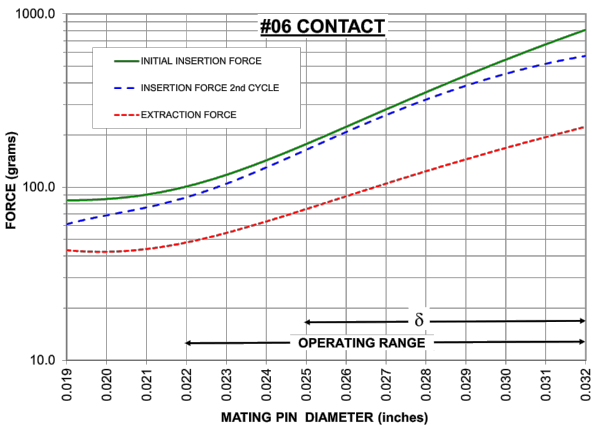


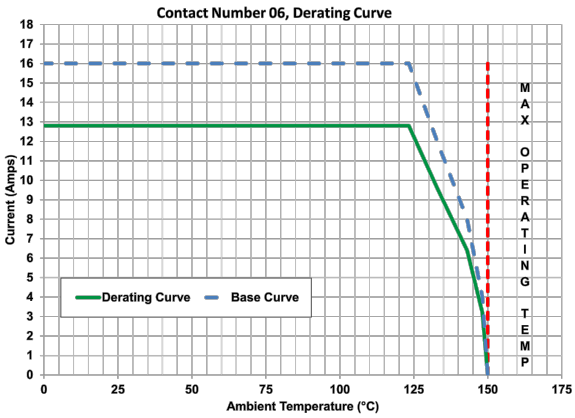


**The insertion / extraction force characteristics above** were derived using a 30 microinch gold-plated contact and polished steel gauge pins having a bullet-shaped tip. The curves represent typical average values; they are best used to compare the differences between similar size contacts and to guide you in selecting one that is suitable for your application. Your results may vary, so for your specification, we encourage you to obtain complimentary samples for your evaluation.

| | | | |
|---|---|---|---|
| **Material** | Beryllium Copper | **Fingers** | 4 |
| **Compliancy (δ)** | 0.007 | **Length** | .113" (2,870mm) |
| **Maximum Current** | 16A @ 30° C Temp. Rise | **Maximum Operating Temp @ Max Current** | 120.00˚ C |
| **20% De-rated Maximum Current** | 12.80A | **Contact Resistance** | 10.00mΩ Max |
| **Contact Group** | D | | |

## ADDITIONAL NOTES AND SPECIFICATIONS

In the interest of improved design, quality and performance , Mill-Max reserves the right to make changes in its specifications without prior notice. Specifications and tolerances are provided wherever possible. The tolerance on dimensions of critical to function features is typically held tighter than the stated standard tolerances, such as press-fits, holes and lengths affecting the coplanarity of SMT products. Due to the wide variety of interconnects Mill-Max offers, the specific tolerances vary from product to product. If you need information regarding the tolerance of a particular part, please contact Technical Services.

## RELATED LINKS AND DOCUMENTS

- Product Detail: 0298-4-15-15-06-27-10-0 - Receptacle With A Standard Tail
- Engineering Notebook: **Introduction to Pin Receptacles**
- Engineering Notebook: **Introduction to Swage Assembly**
- Environmental Compliance: https://www.mill-max.com/rohs