| REVISIONS | | | | | | |
|---|---|---|---|---|---|---|
| REV | ECO NO. | DESCRIPTION | BY | DATE | APP'D BY | DATE |
| 1 | 23533 | ORIGINAL RELEASE | TD | 11/10/2014 | | |

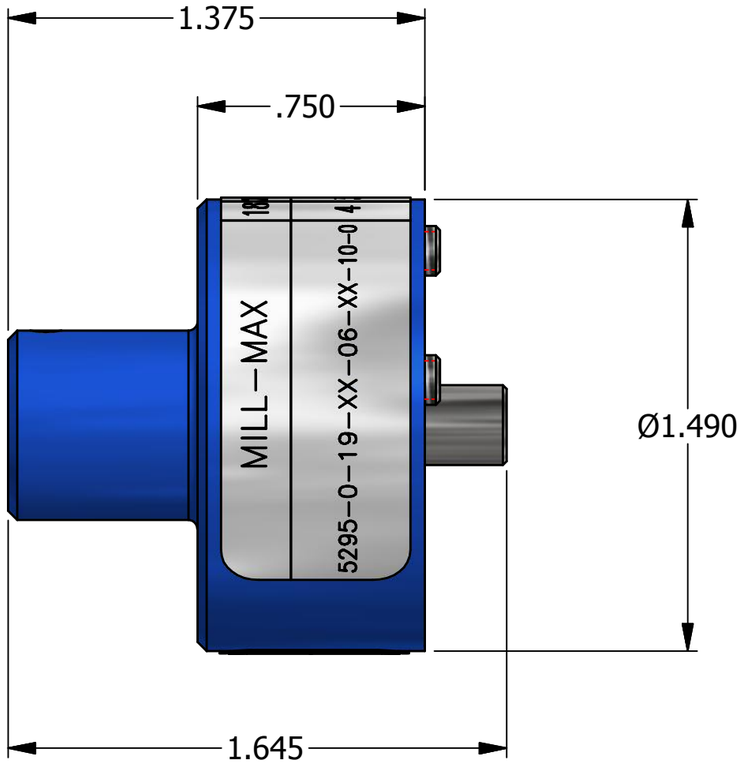


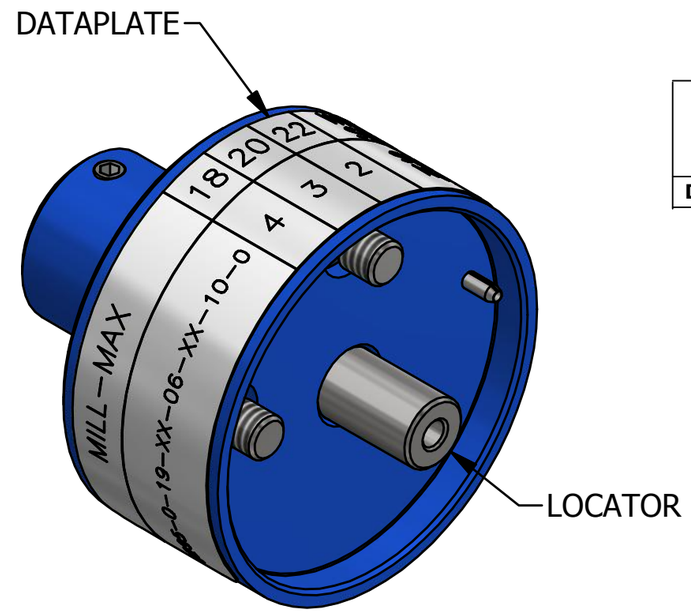


**UNCONTROLLED DOCUMENT WILL NOT BE UPDATED**

**DIMENSIONS IN INCHES - UNLESS OTHERWISE SPECIFIED**

| MILL–MAX | 18 | 20 | 22 | WIRE SIZE |
|---|---|---|---|---|
| 5295–0–19–XX–06–XX–10–0 | 4 | 3 | 2 | SEL No. |

DATAPLATE

| LOCATOR | |
|---|---|
| HOLE DIMENSIONS | ADDITIONAL FEATURES |
| ⌀.100 ↧.225 | |

| MATERIAL | ITEM | PART NO. | QTY. | DESCRIPTION / REMARKS |
|---|---|---|---|---|
| N/A | | | | |

DRN. Tony Dilworth DATE 10/8/2014
CHK'D. DATE

DANIELS MANUFACTURING CORP.
ORLANDO, FLORIDA
CAGE 11851


RESTRICTED & CONFIDENTIAL

CONFIDENTIAL PROPERTY OF DANIELS MANUFACTURING CORP. NOT TO BE DISCLOSED TO OTHERS. REPRODUCTION OR USED FOR ANY OTHER PURPOSE EXCEPT AS AUTHORIZED IN WRITING BY DANIELS MANUFACTURING. MUST BE RETURNED TO DANIELS MANUFACTURING CORP. ON COMPLETION OF ORDER OR PURPOSES FOR WHICH LENT.


CREATED FROM AN INVENTOR MODEL.
CHANGES MUST BE REFLECTED IN THE 3D PART

DO NOT SCALE DRAWING

HEAT TREAT: N/A

FINISH: N/A

NOTE:
THIS DRAWING IS AN OUTLINE DRAWING OF THE RESPECTIVE DMC PART NUMBER INDICATED. ACTUAL DMC PART NUMBER IS DRAWING NUMBER WITHOUT THE "-ENV" SUFFIX

TITLE: SINGLE POSITION HEAD ENVELOPE DRAWING

WHERE USED: AF8

| SIZE | SCALE | CAD P/N | SHEET |
|---|---|---|---|
| B | 2 : 1 | TP1746-ENV | 1 OF 1 |

| DWG. NO. | REV. |
|---|---|
| TP1746-ENV | 1 |